LiGHT SKY



PL1215 II

LED PAR LIGHT

IP66 RGBW RoHS RDM DMX512

FEATURES

- Light Source: 12 x 15W RGBW 4 in 1 LEDs, stable performance, long lifespan
- Optical Zoom: 7-55°, wide zoom range
- Protection Rating: IP66
- Built-in White Balance Adjustment: Ensures consistent color mixing
- Design: Simple, stylish curves, compact, lightweight, easy to install
- Housing Material: High-strength engineering plastic, UV-resistant, high temperature resistant, anti-aging

Unit: mm

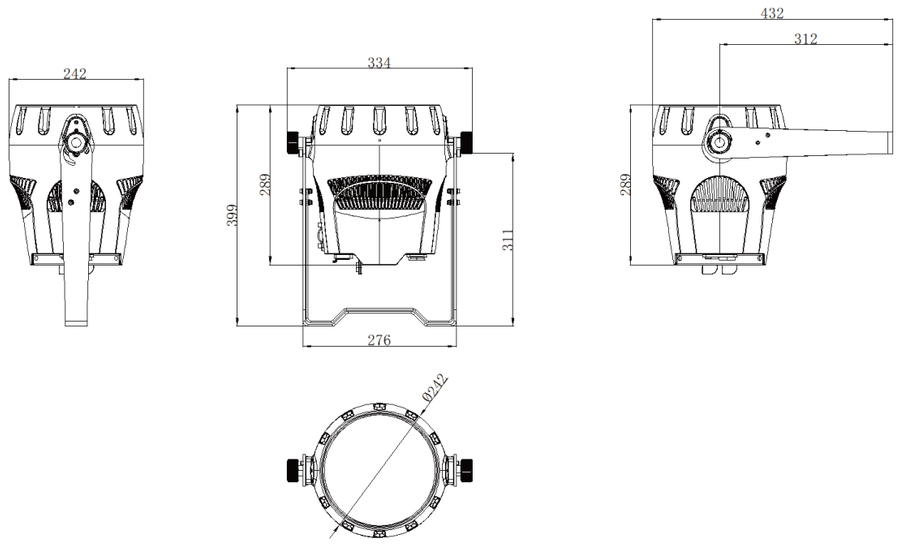

Optics

- Light Source: 12×15W RGBW LED
- Field Angle: 7°- 55°
- Colour Temperature Output: 2500K-10000K
- Color Rendering Index (CRI): Ra≥75
- Illuminance: 5,510 lx @ 5m
- Light Source Theory Life Span: 30,000 h

Effects

- Color Mixing: RGBW color mixing system, uniform and flicker-free, fast rainbow effect
- Zoom System: Linear electric zoom
- Dimming: Electronic dimming with 4 selectable dimming curves, 4 dimming frequencies, and 4 dimming speeds
- Strobe: 1-30Hz electronic strobe and random strobe

Control and Programming

- Control Channels: 10CH, 5CH (see channel chart for details)
- Protocol:DMX512 , RDM
- Data Connection: 3-pin or 5-pin signal IN/OUT
- Display: 0.9-inch LCD screen

Software

- Software upgrade via DMX interface
- Intelligent temperature control for LED lifespan

Power and Electrical

- Input Voltage Range: AC 100-240V 50/60Hz
- Max Power Consumption: 157W
- Power Factor: 0.96
- Maximum Current of Fixture: 0.72A/220V; 1.6A/110V

Size and Weight

- Product Dimensions: 334mm x 242mm x 432mm
- Net Weight: 7.2kg
- Carton Dimensions: 330mm x 330mm x 475mm
- Gross Weight: 9.2kg
- Carton Dimensions(4 in 1): 685mm x 685mm x 500mm
- Gross Weight(4 in 1): 37.2kg

Other

- Protection level: IP66
- Operating environment: -10℃ - 40℃
- Max surface temperature: 80℃

Factory Configuration

- Power Cable: 1 pc (Part No.: F0200030016)
- Signal Cable: 1 pc (Part No.: F0200020008)
- Safety Rope: 1 pc (Part No.: F0200010002)

Optional Accessories/Packaging

- Flycase Dimensions(6 in 1): 915mm x 795mm x 630mm
- Flycase Gross Weight(6 in 1): 82.5 kg

Illumination Diagram

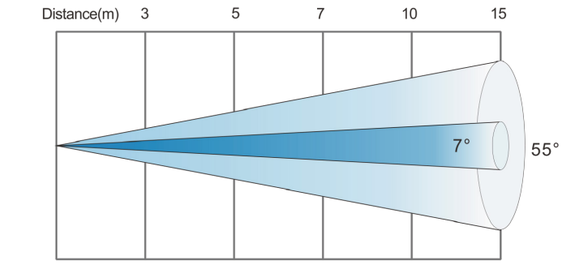

7° Lux R	2250	861	510	226	90
G	5200	2185	1178	551	208
B	200	90	50	23	8
W	6250	2734	1500	700	250
RGBW	12650	5510	3060	1405	506
Diameter (m)	0.37	0.62	0.86	1.23	1.85
55° Lux R	195	62	32	18	8
G	465	131	75	41	19
B	19	5	1	1	1
W	589	162	92	50	24
RGBW	841	339	180	99	34
Diameter (m)	3.12	5.21	7.29	10.41	15.61



